MARINER OUTBOARDS

MERCURY OUTBOARDS

service bulletin

No. 91-21

Flywheel Puller P/N 91-73687A2 – 35 thru 275

Mariner and Mercury

35-275 Models

A new flywheel puller P/N 91-73687A2 with a longer puller bolt is available to remove the inside threaded hub flywheels on the models listed. The previous flywheel puller P/N 91-73687A1 had a puller bolt with a square head that was, in some cases, too short to properly remove the 40 amp. flywheel. Previous flywheel puller P/N 91-73687A1 has been superseded to the new flywheel puller P/N 91-73687A2.

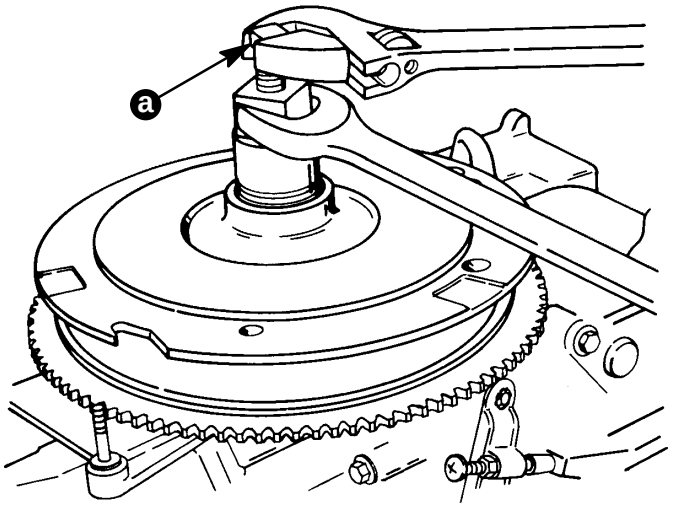

51124

a - Square Head Puller Bolt

Previous Flywheel Puller

The new puller bolt P/N 10-818494 is 2.5 inches (63.5 mm) long, has a 3/4 inch hex head and is available separately to update the previous flywheel puller.

New Flywheel Puller Bolt P/N 10-818494