MARINER OUTBOARDS

MERCURY OUTBOARDS

service bulletin

No. 92-4

Alignment/Memory Piston Removal Tool - P/N 91-11230--1

ALL THREE RAM POWER TRIM SYSTEMS

Previous tool p/n 91-11230 guides the manifold shaft through the manifold and the tilt cylinder during assembly

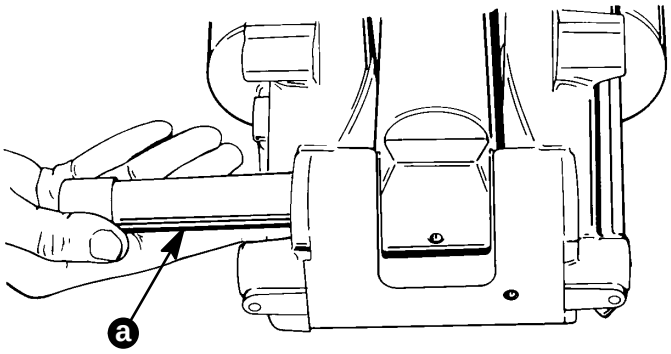

51348

a - Aligning the Tilt Cylinder with the Manifold Assembly

The new tool has an additional function of removing the memory piston from the tilt cylinder. This replaces the previous method of using the manifold shaft which required the difficult task of removing a small plug.

REMOVING MEMORY PISTON

⚠ WARNING

The memory piston may be expelled at a high velocity when air pressure is applied. Failure to place the cylinder as shown could result in personal injury.

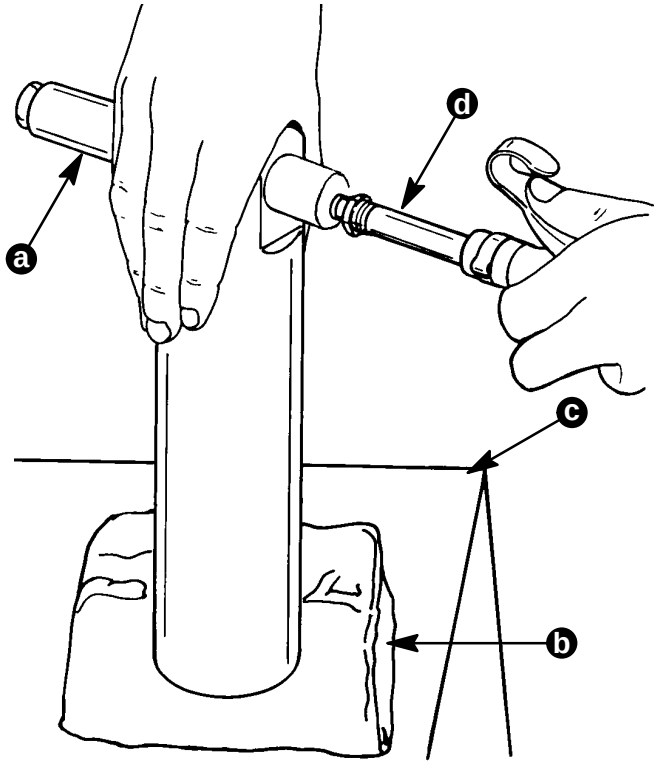

a - Tool P/N 91-11230--1
b - Shop Cloth
c - Solid Surface
d - Air Nozzle

MODIFICATION OF EXISTING TOOL P/N 91-11230

The previous alignment tool may be modified by a local machine shop to remove the memory piston. Modifications consist of machining a groove, drilling a center hole and a connecting hole and rounding the sharp edges.

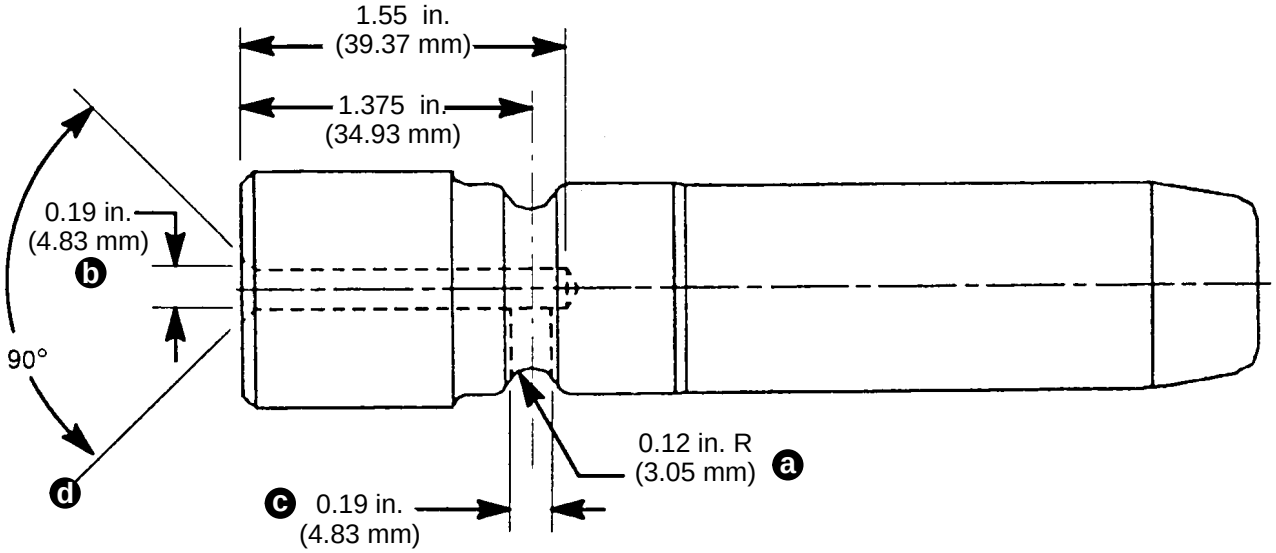

a - Groove
b - Center Hole
c - Connecting Hole
d - Chamfer Center Hole

The previous alignment tool will supersede to the new alignment/memory piston removal tool when the old stock is depleted.

Previous Alignment Tool		New Alignment/ Memory Piston Removal Tool
P/N 91-11230	→	P/N 91-11230--1