service bulletin

No. 89-7

A. **Choke Shutter Interference - 1989-1/2 Mercury 35 Electric Start**

B. **Parts Manual Volumes**

C. **Decals Available - Mariner/Mercury 6/8/9.9/15 Models**

D. **Rough Water Operation - XR4 and Magnum II Outboards**

A. CHOKE SHUTTER INTERFERENCE - 1989-1/2 MERCURY 35 ELECTRIC START

Electrical wire routed incorrectly may contact and restrict choke shutter movement on models listed. Restricted choke shutter movement may cause:

- **Hard Starting** by preventing full choke shutter closing
- **Rich Running** by preventing full choke shutter release

Models affected:

Mercury 19891/2 35 HP Electric Start non power trim and power trim S/N C159200 thru 0C168114.

Check for electrical wire interference with choke shutter operation on units that start hard and/or run rich and during pre-delivery inspection.

Correct wire interference by:

Beginning 1989 1/2 Models (Figure 1)—Reroute wire harness above fuse holder and solenoid as current models are routed (Figure 2) and secure to front cowl support rubber mount with sta-strap (P/N 54-90077). Install second sta-strap around front cowl support bracket and electrical wires to hold all wires forward and away from choke shutter area (Figure 3).

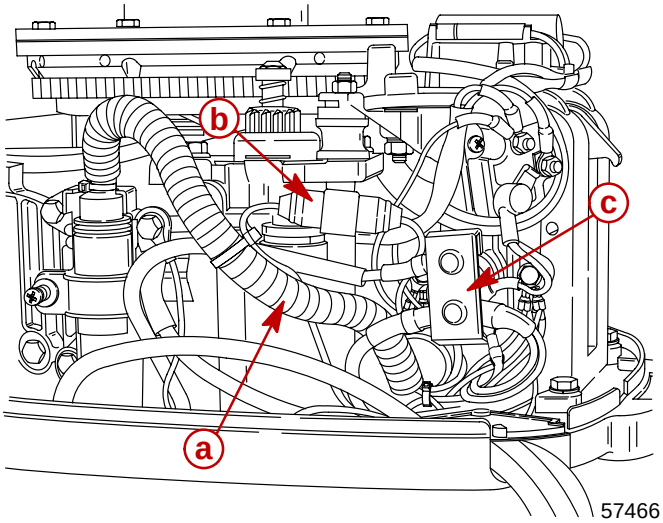

Figure 1. Beginning 1989 1/2 Wire Routing

a - Wire Harness
b - Fuse Holder
c - Solenoid

Current 1989 1/2 Models (Figure 2) — Install sta-strap (P/N 54-90077) around front cowl support bracket and electrical wires to hold all wires away from choke shutter area (Figure 3).

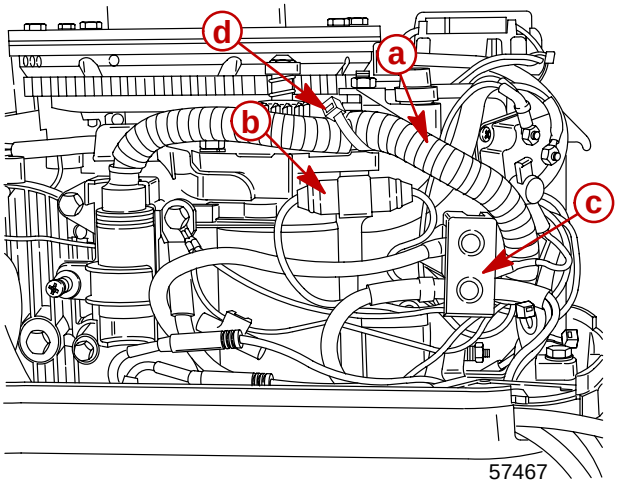

Figure 2. Current 1989 1/2 Wire Routing

a - Wire Harness
b - Fuse Holder
c - Solenoid
d - Sta-Strap Around Wire Harness and Rubber Mount

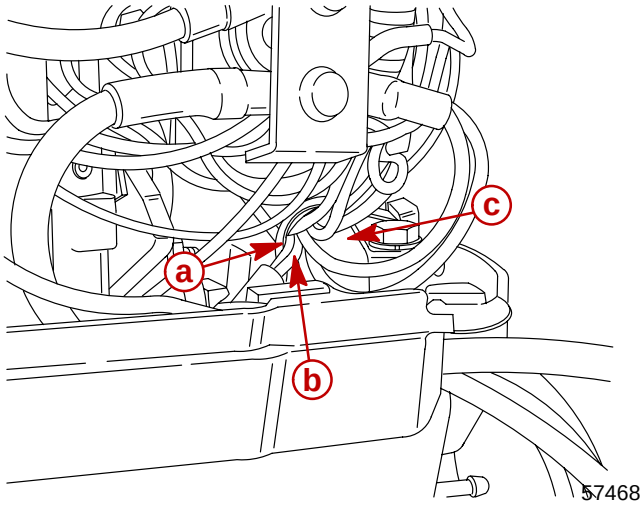

Figure 3. Sta-Strap Location

a - Sta-Strap
b - Wires Held By Sta-Strap
c - Front Cowl Support Bracket

Labor allowance is 0.5 hour. More than one outboard may be listed on a warranty claim, however, it is essential that each serial number is listed.

B. PART MANUAL VOLUMES

Paper Parts Manuals with hard binder must be ordered through your regional distribution center.

Orders for publication items may be placed with your regular parts orders by using the appropriate 90-xxxxx part number.

Mariner Outboard

90-13176	Volume 1	Models 1979 and previous
90-83083	Volume 2	Models 1980 thru 1986
90-17513	Volume 3	Models 1987 thru 1988
90-815150-89	Volume 4	Models 1989 and newer

Mercury Outboard

90-69965	Volume 1	Models 1960 thru 1969
90-69970	Volume 2	Models 1970 thru 1977
90-79219	Volume 3	Models 1978 thru 1979
90-91646	Volume 4	Models 1980 thru 1988
90-815012-89	Volume 5	Models 1989 and newer
90-19078	Hard Cover Binder	

C. DECALS AVAILABLE - MARINER/MERCURY 6/8/9.9/15 MODELS

Two decals that are frequently damaged on Mariner/Mercury 6/8/9.9/15 models are now available separately. Both decals are also included in decal set.

P/N 37-12869 Tilt decal on starboard clamp bracket
P/N 37-12970 Fast/slow decal for idle speed

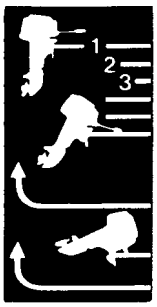

P/N 37-12869

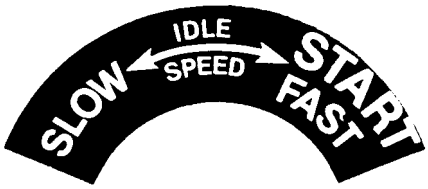

P/N 37-12970

D. ROUGH WATER OPERATION - XR4 AND MAGNUM II OUTBOARDS

While running in rough water, some bass boat operators have experienced RPM loss at wide-open-throttle. This problem is caused by the **carburetor inlet needles** staying off-seat in rough water. To correct the RPM loss, install new carburetor inlet needle and seat P/N 814786. (6 required)

Later model XR4 and Magnum II outboards with WH41-1**A**, 2**A** and 3**A** carburetors have the new inlet needle and seat and should not be subject to the above problem.

P/N 814786 Inlet Needle and Seat