MERCURY MARINER

service bulletin

☐ WARRANTY INFORMATION ☐ SERVICE INFORMATION
☑ PARTS INFORMATION

Bulletin No. 2002-13
Jet Drive No. 2002-04

Circulate to: ☐ Sales Manager ☐ Accounting ☑ Service Manager ☑ Technician ☑ Parts Manager

Cylinder Bore Seals 3.0 Liter Outboards and Jet Drive

Models Affected

MERCURY/MARINER

1994 Thru 2001 Carb/SeaPro/Marathon, S/N 0D280813 Thru S/N 0T408999

1995 and Newer EFI, S/N 0G129222 and above

1998 and Newer OptiMax, S/N 0G590000 and above

2002 Jet Drive, S/N 0E407100 and above

Situation

There have been three different cylinder bore seals/O-ring used on the above listed engines. Due to the newer cylinder heads and power heads being back fitted/superseded, care must be taken when selecting the cylinder bore seals that will be used for repair. Chart number 1 (below) shows which cylinder bore seal was **ORIGINALLY** used per HP, model, and model year.

Chart No. 1 Original Bore Seals

Year and Model	S/N Range	Seal Part No.
1994 - 2001 Carb/SeaPro/Marathon	0D280813 - 0T408999	818573
1995 - 2001 EFI	0G129222 - 0T408999	818573
2002 EFI	0T409000 - 0T598999	878453
2003 EFI	0T599000 and above	884391
1998 - 2000 OptiMax	0G590000 - 0T178499	818573
2001 - 2002 OptiMax	0T178500 - 0T598999	878453
2002 Jet Drive	0E407100 and above	884391
2003 OptiMax	0T599000 and above	884391

THE INFORMATION IN THIS DOCUMENT IS CONFIDENTIAL AND PROTECTED BY COPYRIGHT AND IS THE PROPERTY OF MERCURY MARINE.

This document is provided for the sole and exclusive use of the original recipient as prescribed by Mercury Marine and may not be distributed or copied, digitally or otherwise, without the prior written consent of Mercury Marine.

Cylinder Head Identification

Casting numbers or numbers that are stamped or etched into the cylinder head can be used to identify cylinder heads. There have been six different locations for these markings on the cylinder heads (see pictures following). Since a later style power head or cylinder head(s) may have been installed, identify the cylinder head(s) prior to selecting the cylinder bore seals. After the cylinder head(s) have been identified, select the correct bore seal from chart No. 2 on pages 3 and 4 of this bulletin.

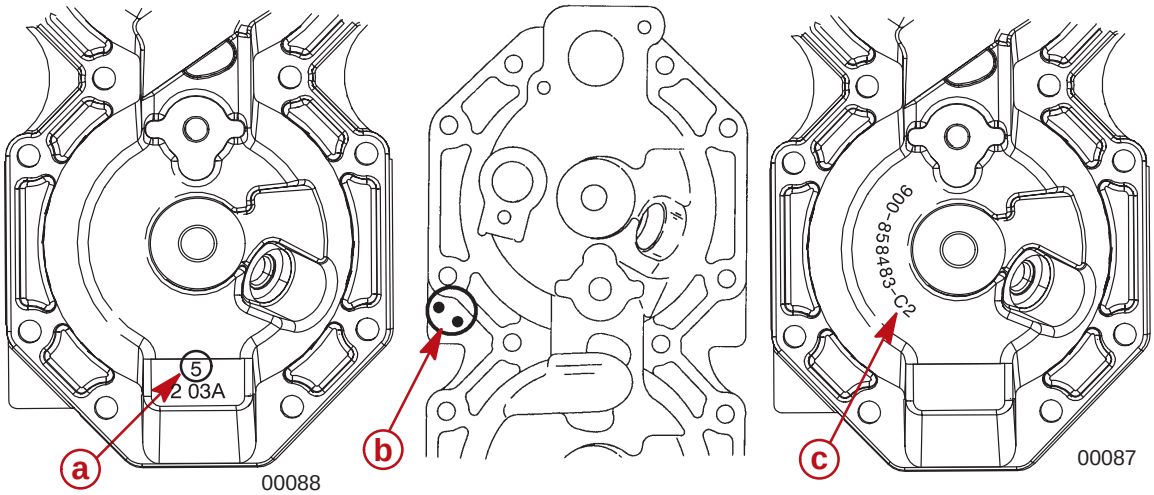

a - Number etched on flat near bottom of head
b - Identification holes drilled in head
c - Casting number on top of dome

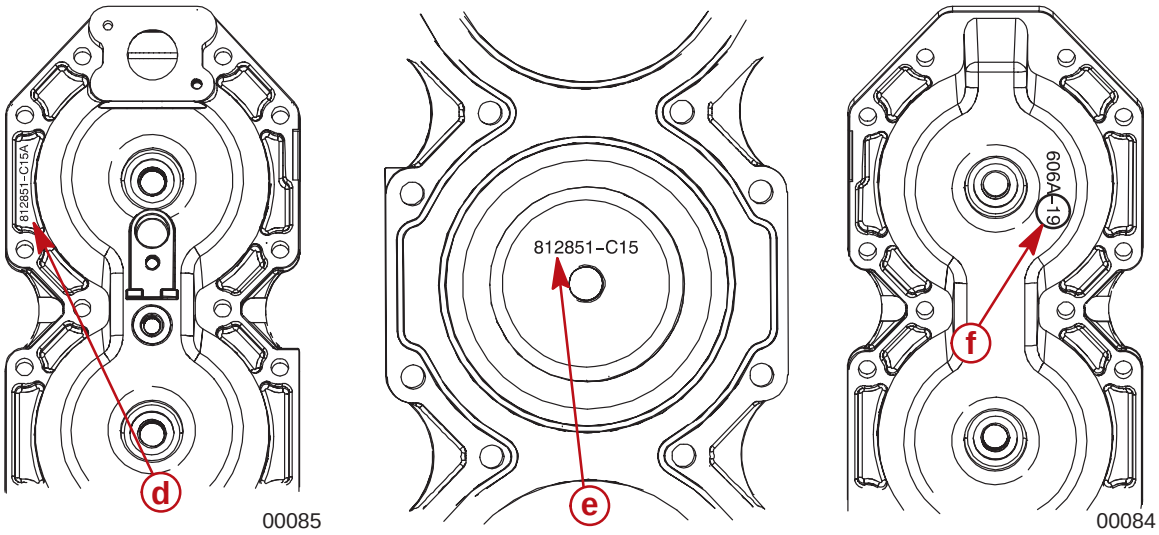

d - Casting number recessed area of head near top of head
e - Casting number on the inside of dome
f - Number etched into the top of dome

THE INFORMATION IN THIS DOCUMENT IS CONFIDENTIAL AND PROTECTED BY COPYRIGHT AND IS THE PROPERTY OF MERCURY MARINE.
This document is provided for the sole and exclusive use of the original recipient as prescribed by Mercury Marine and may not be distributed or copied, digitally or otherwise, without the prior written consent of Mercury Marine.

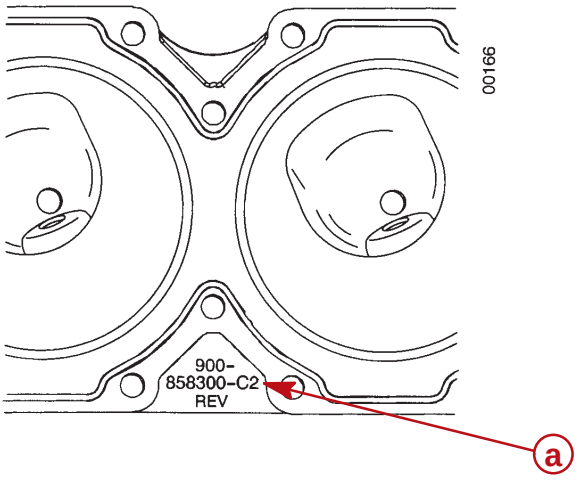

a - Casting number on bottom side of flange

Chart No. 2 Cylinder Head Identification

Casting #	Model	Number location	Seal Part No.
812851C-2	EFI 225/250 OB	Casting # in dome	818573
812851C-4	Work/SeaPro	Casting # in dome and -5 etched on head	818573
812851C-4	3.0 Liter SeaPro	Casting # in dome and -15 etched on head	878453
812851C-10	EFI 225/250	Casting # in dome and recessed area	818573
812851C-11	EFI 225	Casting # in dome and -12 etched on head	818573
812851C-11	225/250 EFI	Casting # in dome, and -16 etched on head	878453
812851C-13	EFI	Casting # in dome and -18 etched on head	878453
812851C-15	225/250 EFI	Casting # in dome and -19 etched on head	878453

THE INFORMATION IN THIS DOCUMENT IS CONFIDENTIAL AND PROTECTED BY COPYRIGHT AND IS THE PROPERTY OF MERCURY MARINE.

This document is provided for the sole and exclusive use of the original recipient as prescribed by Mercury Marine and may not be distributed or copied, digitally or otherwise, without the prior written consent of Mercury Marine.

812851C-16	300 ProMax	Casting # in dome and -20 etched on head	878453
812851C-13	3.0 Liter EFI Work	Casting # in dome and -21 etched on head	884391
812851C-15	225/250 EFI	Casting # in dome and -22 etched on head	884391
812851C-10	300 ProMax	Casting # in dome and -23 etched on head	884391
812851C-11	250 XB	Casting # in dome and -24 etched on head	884391
812851C-16	300X	Casting # in dome and -25 etched on head	884391
812851C-2	EFI 225/250	Raised casting No. in dome and -26 etched on head	884391
858298C	200 OptiMax	Casting #	818573
858299C	200 OptiMax	Casting #	818573
858300C-2	225 OptiMax	Temp sensor hole on side of head	818573
858300C-2	225 OptiMax	2 drill dots	818573
858300C-2	200 OptiMax	1 drill dot	818573
858301-C	200 OptiMax	1 drill dot	818573
858301-C	225 OptiMax	2 drill dots	818573
858485C-1	225 OptiMax	Casting # on top of dome, 2 drill dots	818573
858485C-2	225 OptiMax	Casting # on top of dome	878453
858485C-2	250 Jet Drive	Etched –5 on flat near bottom of head	884391
858485C-2	200/225 OptiMax	Etched –6 on flat near bottom of head	884391
858483C-1	225 OptiMax	Casting # on top of dome, 2 drill dots	818573
858483C-2	225 OptiMax	Casting # on top of dome	878453
858483C-2	250 Sport Jet	Etched –5 on flat near bottom of head	884391
858483C-2	200/225 OptiMax	Etched –6 on flat near bottom of head	884391
841020C-2	250 XS	Etched –2 on flat near bottom of head	884391
841021C-2	250 XS	Etched –2 on flat near bottom of head	884391
858298C	200 OptiMax	Raised casting No. on flange and -1 etched on flat near bottom of head	884391
858299C	200 OptiMax	Raised casting No. on flange and -1 etched on flat near bottom of head	884391
858300C-2	200/225 OptiMax	Raised casting No. on flange and -3 etched on flat near bottom of head	884391
858300C-2	200 OptiMax	Raised casting No. on flange and -4 etched on flat near bottom of head	884391
858301-C	200 OptiMax	Raised casting No. on flange and -3 etched on flat near bottom of head	884391
858301-C	225 OptiMax	Raised casting No. on flange and -4 etched on flat near bottom of head	884391

THE INFORMATION IN THIS DOCUMENT IS CONFIDENTIAL AND PROTECTED BY COPYRIGHT AND IS THE PROPERTY OF MERCURY MARINE.

This document is provided for the sole and exclusive use of the original recipient as prescribed by Mercury Marine and may not be distributed or copied, digitally or otherwise, without the prior written consent of Mercury Marine.

Bore Seal and Seal Groove Identification

Cylinder heads may also be identified by measuring the width, depth and diameter of the seal groove in the cylinder head. The diameter and cross section view of the three different bore seals is shown below.

NOTE: *The service replacement seal for P/N 884391 used on the 2003 product has a dull YELLOW color to help identify it. Early production engines used the same seal without the YELLOW color.*

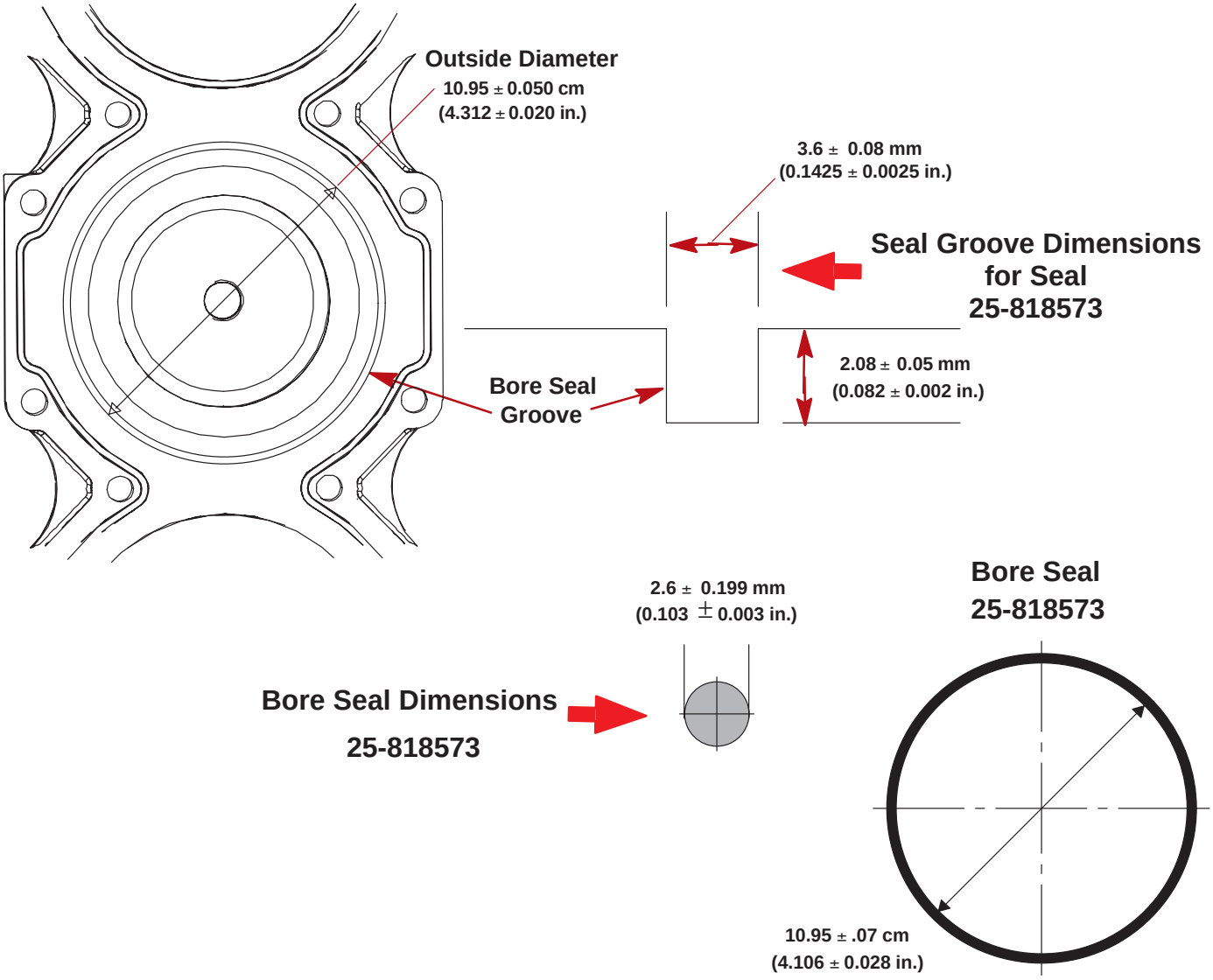

THE INFORMATION IN THIS DOCUMENT IS CONFIDENTIAL AND PROTECTED BY COPYRIGHT AND IS THE PROPERTY OF MERCURY MARINE.

This document is provided for the sole and exclusive use of the original recipient as prescribed by Mercury Marine and may not be distributed or copied, digitally or otherwise, without the prior written consent of Mercury Marine.

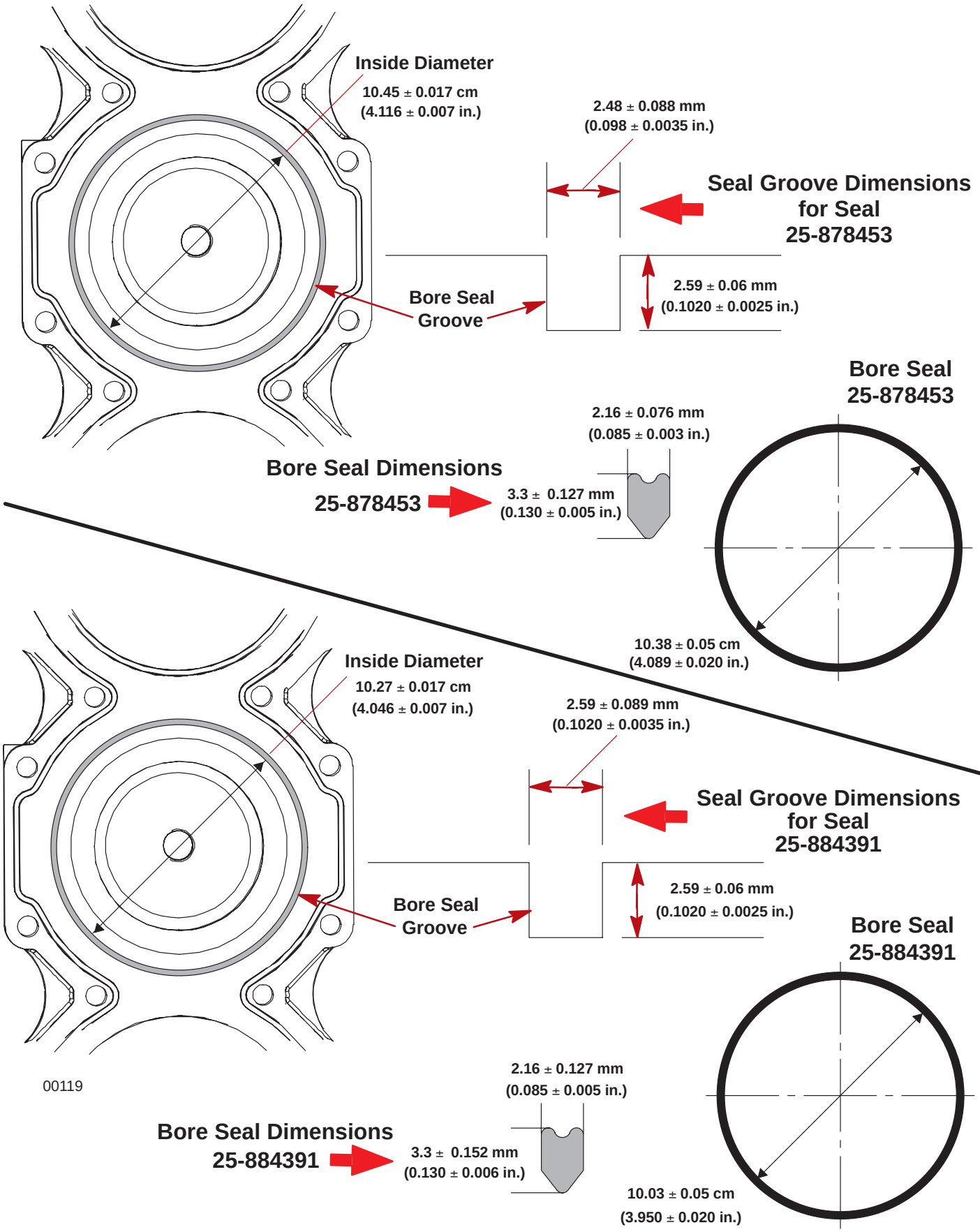

THE INFORMATION IN THIS DOCUMENT IS CONFIDENTIAL AND PROTECTED BY COPYRIGHT AND IS THE PROPERTY OF MERCURY MARINE.

This document is provided for the sole and exclusive use of the original recipient as prescribed by Mercury Marine and may not be distributed or copied, digitally or otherwise, without the prior written consent of Mercury Marine.